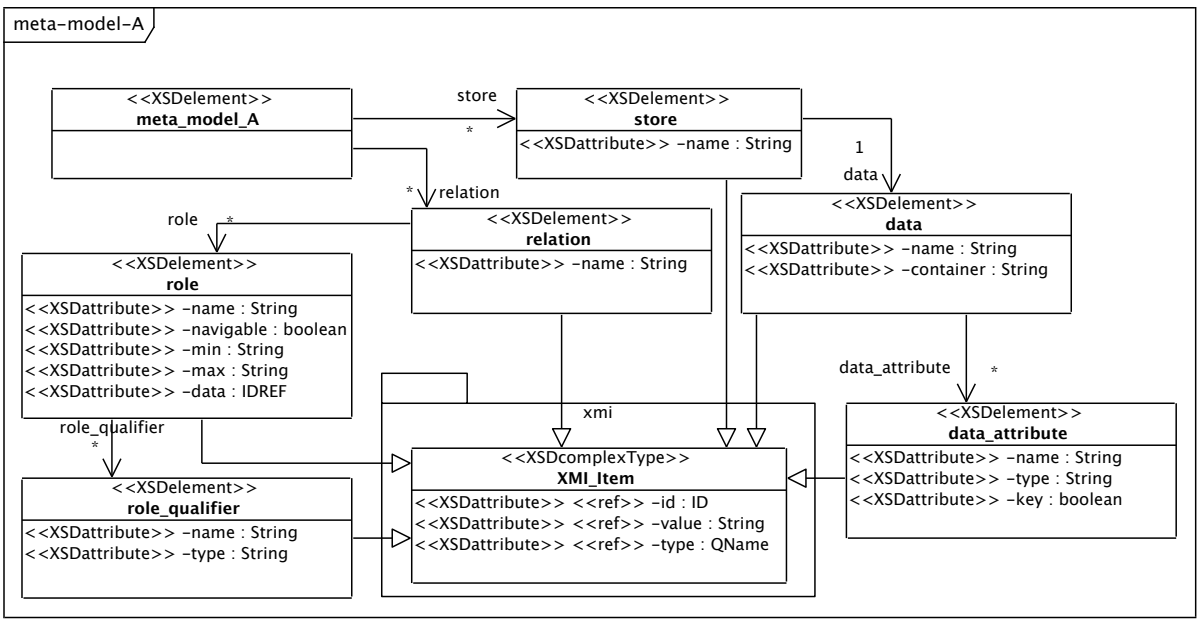
meta-model-A
<<XSDelement>>
meta_model_A
store
*
<<XSDelement>>
store
<<XSDattribute>> -name : String
1
data
*
relation
role
*
<<XSDelement>>
relation
<<XSDattribute>> -name : String
<<XSDelement>>
data
<<XSDattribute>> -name : String
<<XSDattribute>> -container : String
<<XSDelement>>
role
<<XSDattribute>> -name : String
<<XSDattribute>> -navigable : boolean
<<XSDattribute>> -min : String
<<XSDattribute>> -max : String
<<XSDattribute>> -data : IDREF
data_attribute
*
xmi
role_qualifier
*
<<XSDcomplexType>>
XMI_Item
<<XSDattribute>> <<ref>> -id : ID
<<XSDattribute>> <<ref>> -value : String
<<XSDattribute>> <<ref>> -type : QName
<<XSDelement>>
data_attribute
<<XSDattribute>> -name : String
<<XSDattribute>> -type : String
<<XSDattribute>> -key : boolean
<<XSDelement>>
role_qualifier
<<XSDattribute>> -name : String
<<XSDattribute>> -type : String